USER'S MANUAL SR-16

READ ALL INSTRUCTIONS BEFORE USE!

- **FOR ADULT USE ONLY. NOT TO BE OPERATED BY MINORS UNDER THE AGE OF 18.**
- **NEVER MODIFY OR ALTER YOUR AIRSOFT GUN.** Attempts to modify the airsoft gun in any way or to alter airsoft gun ammo/BBs may cause serious injury or death, and will void the warranty.
- Misuse of Airsoft Guns is dangerous and can cause serious injury or death. Always treat an airsoft gun as if it is a firearm and do not point towards a real firearm.

SAFETY CONSIDERATIONS

- **NEVER** point the airsoft gun at anything you do not intend to shoot.
- **NEVER** shoot at targets that may cause the BB to bounce off, such as hard surface that could produce a ricochet.
- **ALWAYS** ensure the operator and everyone nearby are wearing appropriate eye protection when the airsoft gun is operated or when BBs are being swept or picked up.
- **ONLY** shoot the airsoft gun in designated area, towards a safe direction, using a sufficient backstop.

CAUTION

GENERAL PRECAUTIONS

- This product does not contain any external components compatible or interchangeable with a real firearm.
- This merchandise cannot accept firing components from a real firearm, nor be able to chamber .F/m real ammunition.
- This merchandise is designed to function solely with 6mm airsoft ammunition.
- **DO NOT** modify the appearance of the airsoft gun to resemble a real firearm.
- **NEVER** reuse a BB that is dirty, has been shot from the gun, or otherwise deformed. Dirty, contaminated or imperfect BBs could damage your gun.
- **ALWAYS** store the airsoft gun in its original box or in an appropriate gun case.
- **NEVER** carry the gun in plain sight.
- **ALWAYS** store the airsoft gun unloaded, and out of reach by children.
- Using unauthorized repair centers or modifying the function of your airsoft gun in any way may be unsafe and will void your warranty.
- Airsoft Guns are toys. Airsoft Gun Manufacturers are not liable for any malfunction, accidents, injuries or repair cost resulting from misuse, or by disassembly and modification of the airsoft gun.

WARNING

CAUTION TO PREVENT BATTERY POWER DRAINAGE, BATTERY MUST BE UNPLUGGED AND STORED SEPARATELY FROM AIRSOFT GUN AFTER USE.

POWER SOURCE :	AEG
BATTERY :	11.1v LiPo
LENGTH :	SHORT 680mm - 760mm LONG 765mm - 850mm
WVEIGHT :	SHORT 2200g LONG 2300g
MAGAZINE CAPACITY :	300 rounds
FIRE MODE :	SAFE / SEMI / AUTO
MATERIAL :	METAL + NYLON FIBER
HOP-UP :	ADJUSTABLE

INTSALL & RELEASE MAGAZINE

1. PLUG MAGAZINE INTO SLOT
1. PRESS MAGAZINE RELEASE BUTTON
2. PULL AWAY MAGAZINE

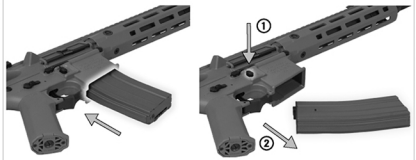

BATTERY INSTALLTION

1. PULL DOWN AND HOLD THE BUTTSTOCK LOCK
2. PULL BACKWARD STOCK TO REMOVE FROM BUFFER TUBE
3. CONNECT THE BATTERY CONNECTOR

FIRE MODE

1. SAFE MODE : FLIP FORWARD
2. SEMI MODE : FLIP DOWN
3. AUTO MODE : FLIP BACKWARD

TO SHOOT

1. PULL TRIGGER TO SHOOT

HOP-UP ADJUSTMENT

1. PULL AND HOLD CHARGING HANDLE
2. AFTER DUST COVER OPEN
3. TURN WHEEL UP FOR MORE HOP-UP / DOWN FOR LESS HOP-UP

SLIGHT

1. SIMPLY FLIP SIGHT UP TO USE, DOWN TO CLOSE

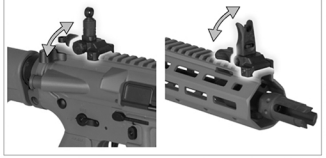

STOCK ADJUSTMENT
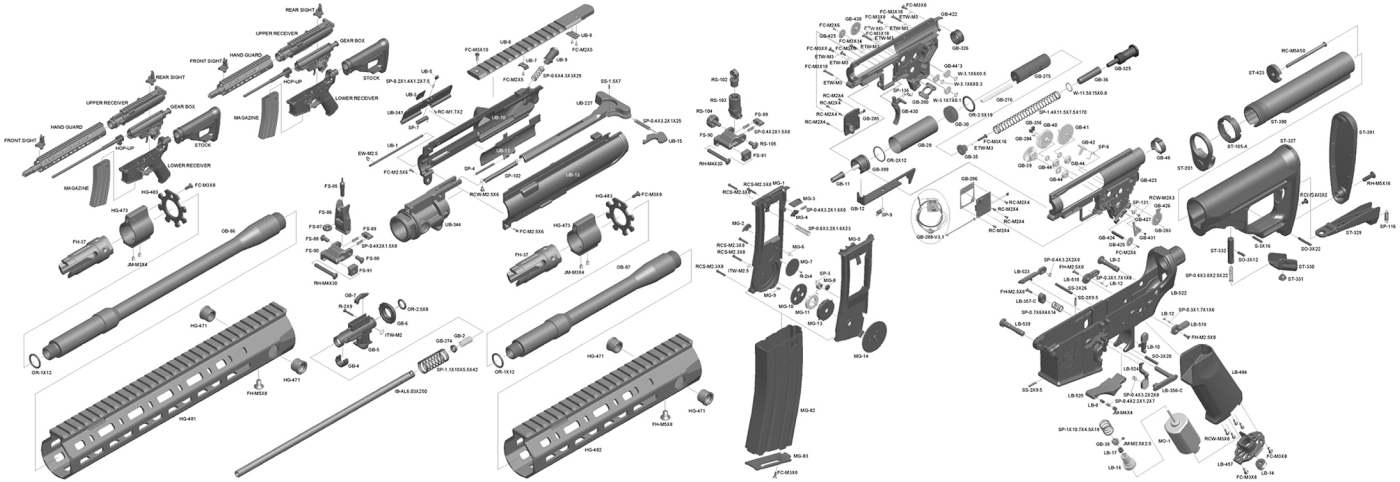
1. PRESS STOCK ADJUSTABLE BUTTON
2. PULL STOCK TO IDEAL POSTION AND RELEASE